Eckstein Law Library
First Floor

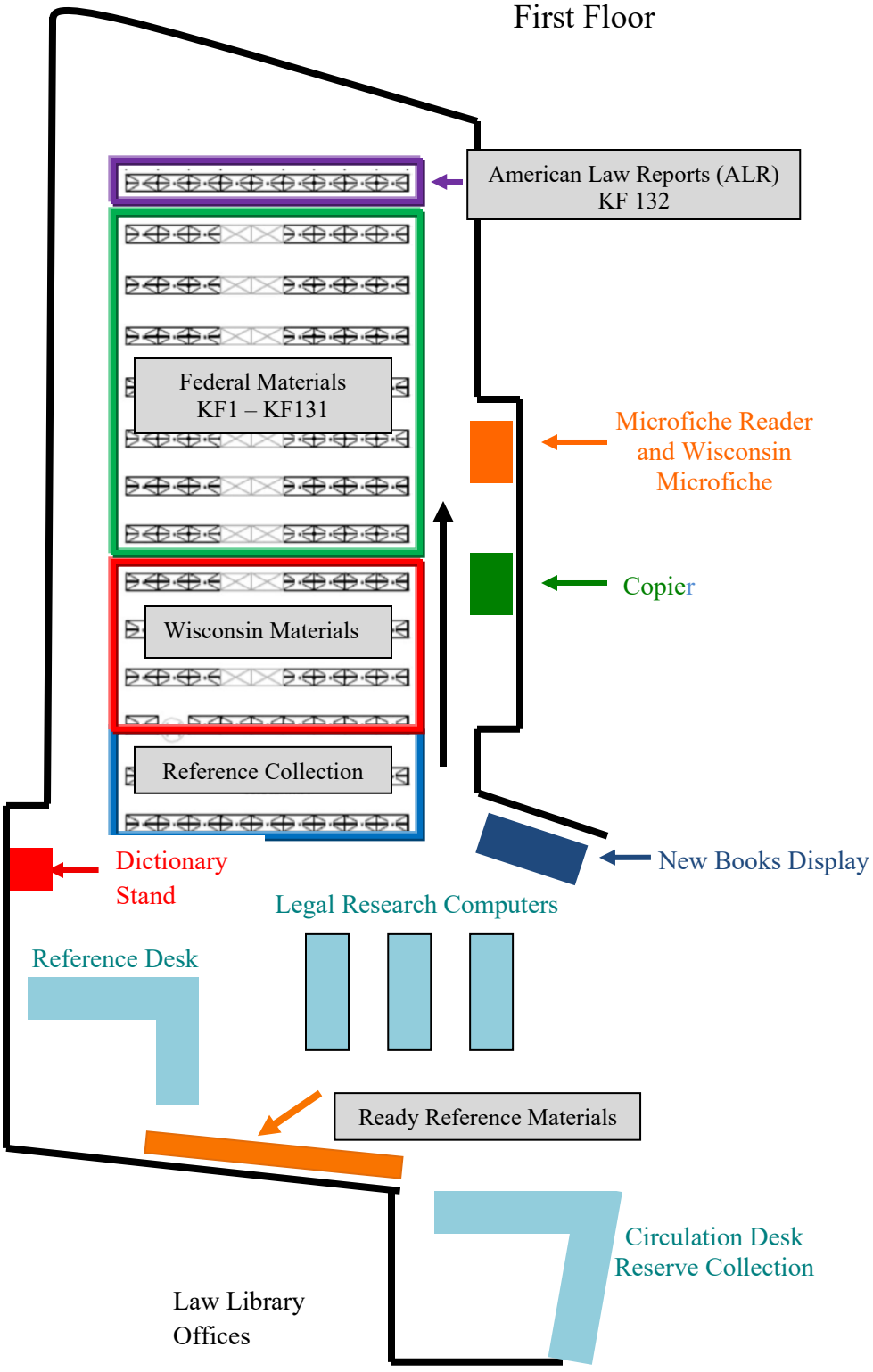

Restrooms are located near the elevators on each floor.

Elevators

Eckstein Law Library
Second Floor

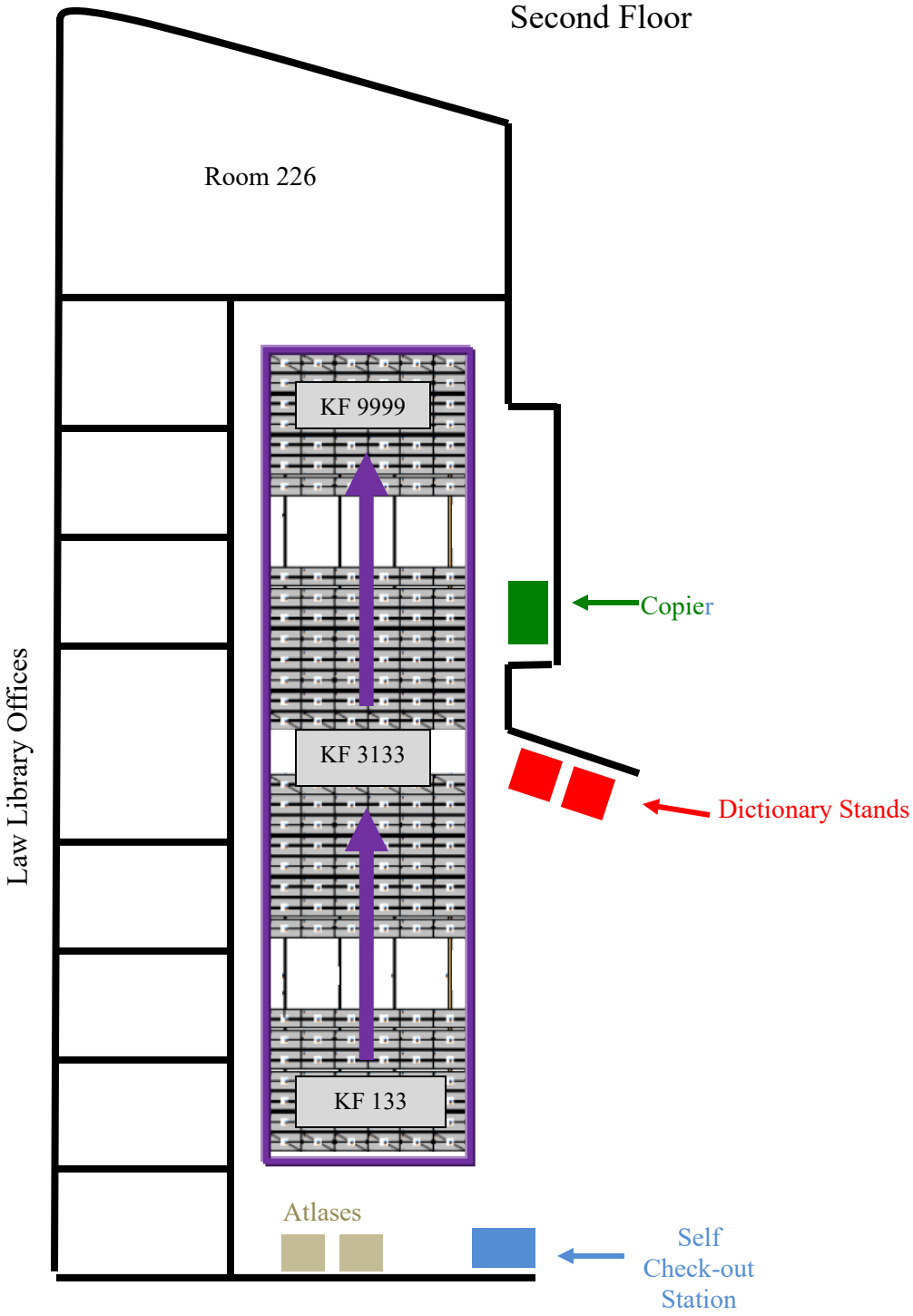

Restrooms are located near the elevators on each floor.

Elevators

Eckstein Law Library
Third Floor

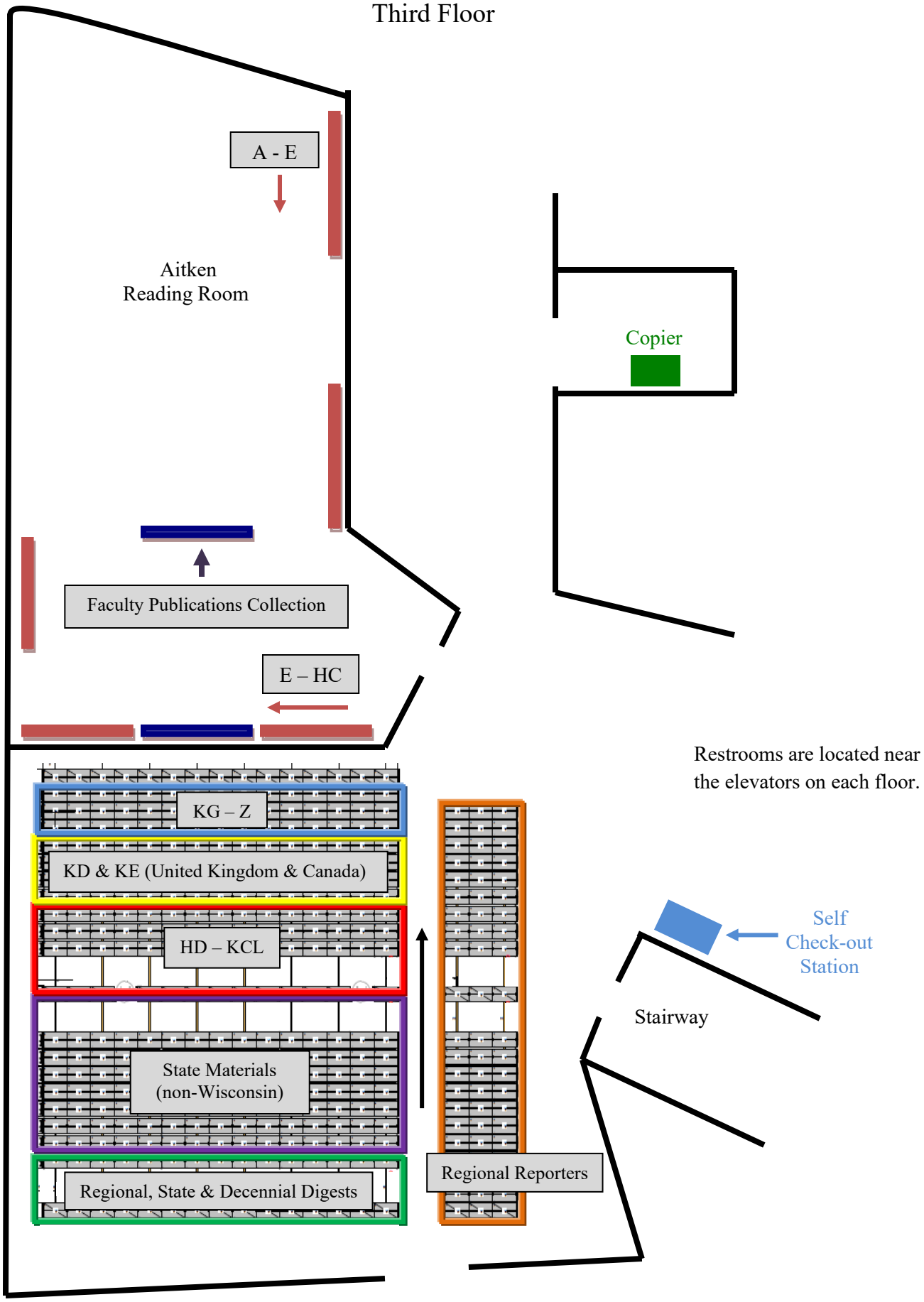

Eckstein Law Library
Fourth Floor

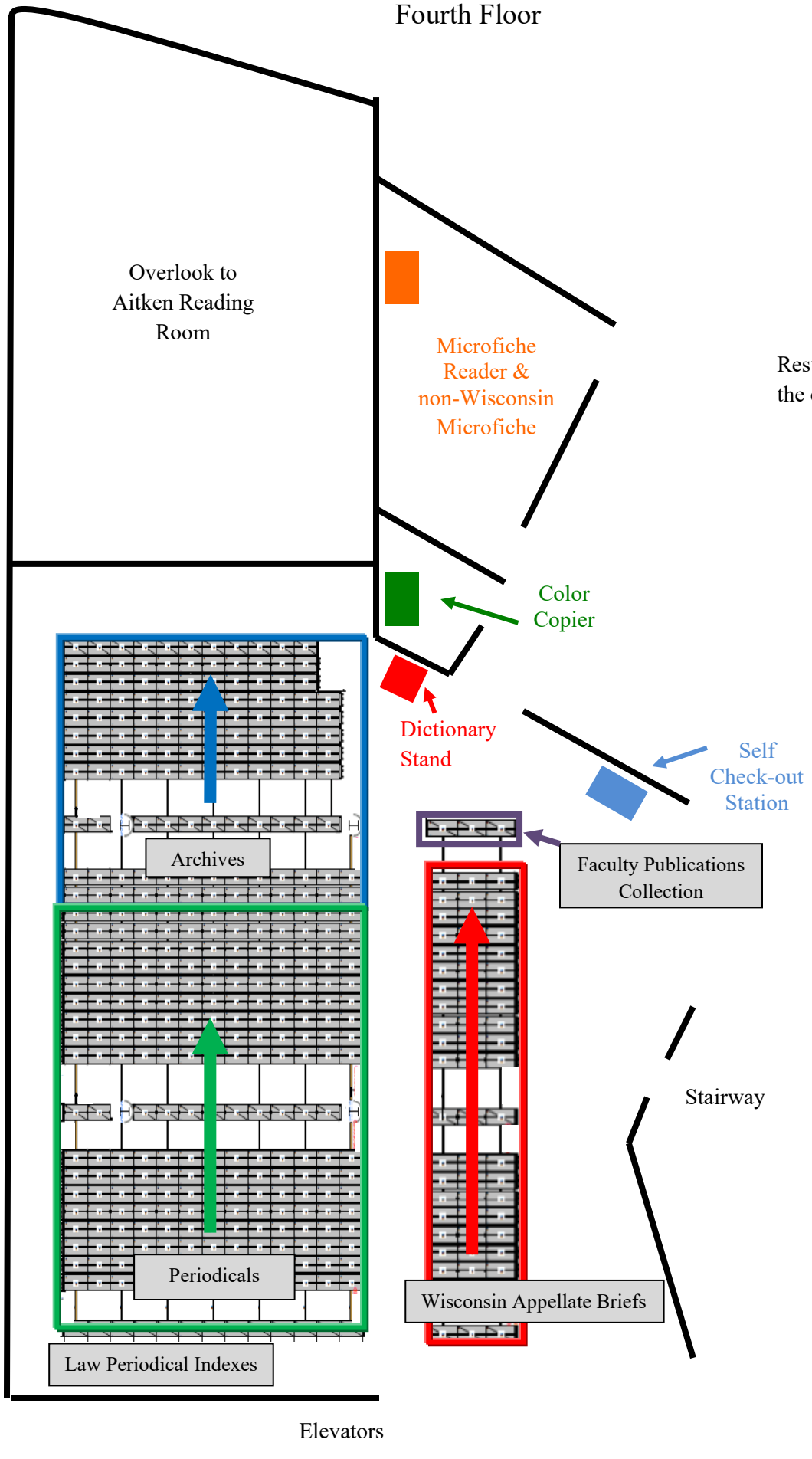

Restrooms are located near the elevators on each floor.